AB 3-Speed Wide-Ratio Hub combined with Internal Expanding Brake

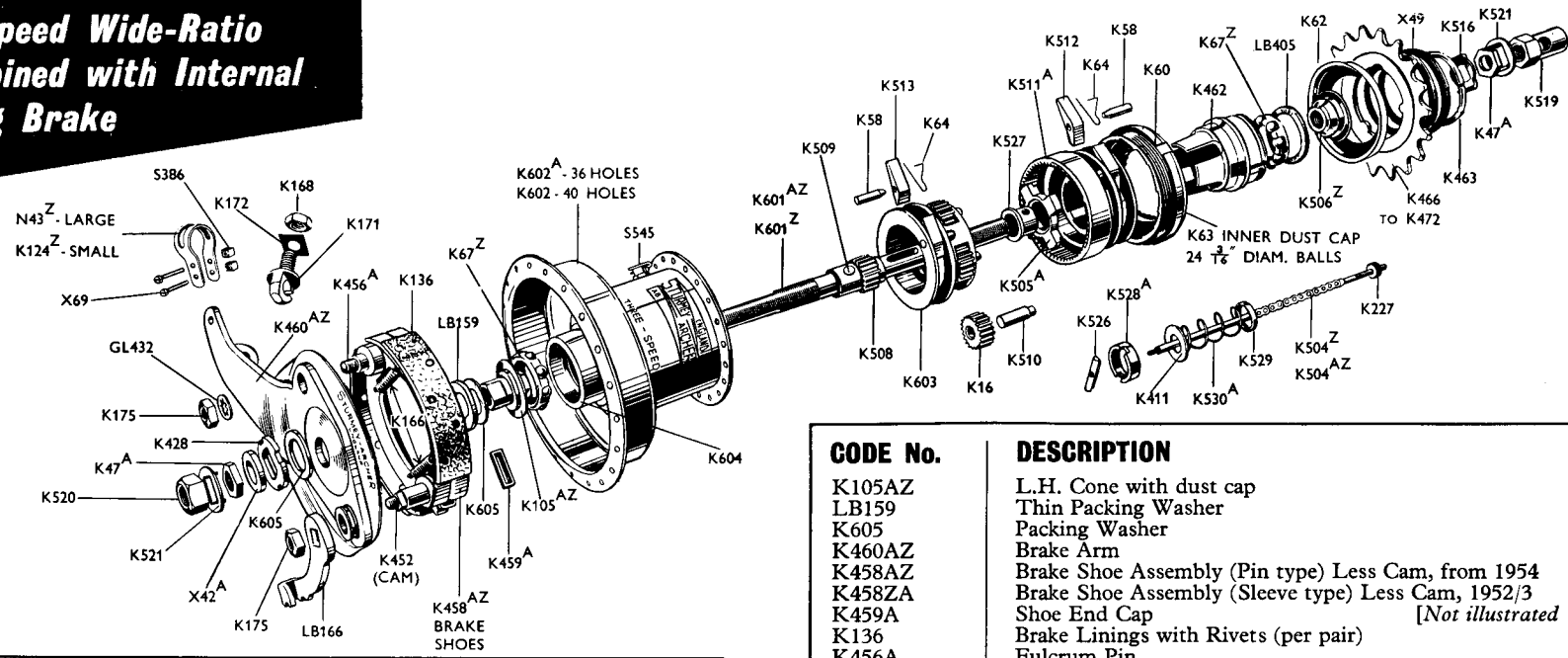

CODE No.	DESCRIPTION
K601AZ	Axle complete with Sun Pinion, 6¼″ long
K601Z	Axle with Sun Pinion, 5¾″ long
K508	Sun Pinion only
K509	Dowel for Sun Pinion
K603	Planet Cage
K527	Clutch Sleeve
K505A	Sliding Clutch
K526	Axle Key
K528A	Thrust Ring
K411	Thrust Washer
K16	Planet Pinion
K510	Pinion Pin
K511A	Gear Ring
K512	Gear Ring Pawl
K64	Pawl Spring
K58	Pawl Pin
K60	R.H. Ball Ring
329	Ball Bearings 3/16″ diam. (per set of 24)
K63	Inner Dust Cap
K530A	Clutch Spring
K529	Clutch Spring Cap
K462	Driver
K67Z	Ball Cage with ¼″ diam. balls
LB405	Outer Dust Cap
K506Z	R.H. Cone with dust cap
K516	Lock Washer for R.H. Cone
K513	Low Gear Pawl
K602	Shell, 40 holes
K602A	Shell, 36 holes
S545	Lubricator
K604	L.H. Ball Cup

CODE No.	DESCRIPTION
K105AZ	L.H. Cone with dust cap
LB159	Thin Packing Washer
K605	Packing Washer
K460AZ	Brake Arm
K458AZ	Brake Shoe Assembly (Pin type) Less Cam, from 1954
K458ZA	Brake Shoe Assembly (Sleeve type) Less Cam, 1952/3
K459A	Shoe End Cap [*Not illustrated*
K136	Brake Linings with Rivets (per pair)
K456A	Fulcrum Pin
K166	Brake Shoe Spring
K452	Cam
K456	Fulcrum Sleeve, 1952/3 only. *Not illustrated*
GL432	Locking Washer
LB166	Cam Lever
K175	Cam Lever Nut
K171	Wire Guide } Not required for
K172	Lock Washer } rod-operated
K168	Guide Nut } brake controls
K504AZ	Indicator for long axle (K601AZ)
K504Z	Indicator for short axle (K601Z)
K227	Connection Locknut
K428	Notched Adjusting Washer
X42A	Spacing Washer (⅛″ thick)
K47A	Cone Locknut
K521	Axle Washer
K519	R.H. Axle Nut
K520	L.H. Axle Nut
K62	Sprocket Dust Cap
K466	Sprocket, 16 teeth
K467	Sprocket, 17 teeth
K468	Sprocket, 18 teeth
K468A	Sprocket, 18 teeth for 3/16″ wide chain
K469	Sprocket, 19 teeth
K469A	Sprocket, 19 teeth for 3/16″ wide chain
K470	Sprocket, 20 teeth
K472	Sprocket, 22 teeth
X49	Sprocket Spacing Washer (1/16″ thick)
K463	Circlip
N43Z	Brake Arm Clip complete, for oval or D tubing
K124Z	Brake Arm Clip complete for round tubing
X69	Clip Screw
S386	Clip Nut

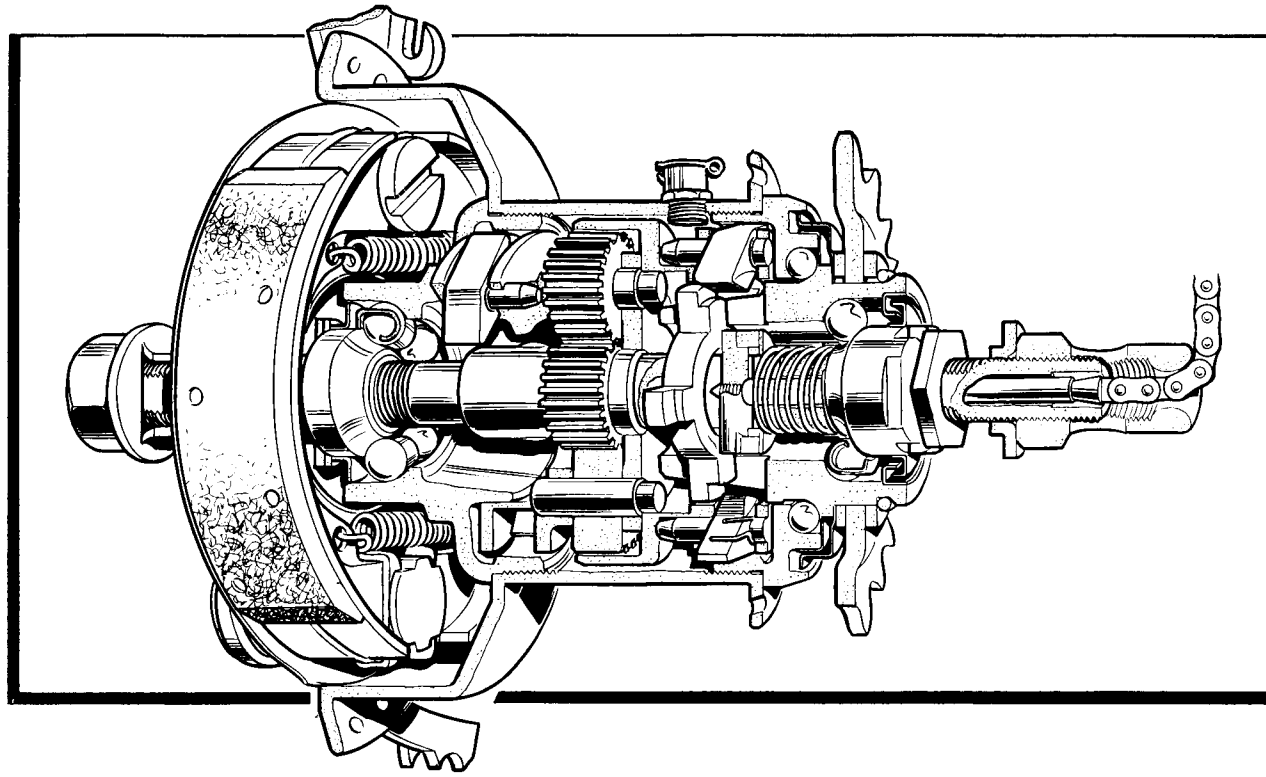

TO RE-ASSEMBLE THE AB HUB

Proceed as follows:

1. If the left-hand ball cup has been removed from the hub shell, use the special tool (box spanner DD911) to replace it, and remember that it must be screwed anti-clockwise because it has a *left-hand thread*. The joint between the ball cup and the hub shell must be cemented with a good sealing compound to prevent oil from leaking through to the brake shoes. Either the slight recess in the shell or the face of the shoulder on the ball cup which makes contact with the shell should be well painted over with sealing compound before the ball cup is screwed home.
2. Prepare the following preliminary sub-assemblies:
   a. Fit the ball cage into the driver, with the ring of the ball-retainer facing outwards and the recess in the dust cap also facing outwards. If a new ball-retainer is being fitted, the dust cap also should be new. If the sprocket has been removed, see No. 19 below.
   b. Fit the balls (only 24) and the inner dust cap to the right-hand ball ring, making sure that the balls can revolve freely with the dust cap in place.
   c. Fit the pawls, pins and springs into the gear ring as described in the general instructions to 'The Re-assembling of Sturmey-Archer Hubs.' (The planet-cage pawls, pins and springs are not fitted at this stage.)
   d. Smear grease in the channels of the dust caps of the driver and in the recess of the right-hand ball ring. *Do not use grease anywhere else.*
3. Hold the left-hand end of the axle in a vice, so that the slot for the axle key is above the sun pinion, and fit the planet cage.
4. Add the planet pinions and pins. (The small ends of the pins protrude.)

5. Fit the sleeve (flange first), the sliding clutch with the recess over the flange of the sleeve, and the axle key (with the flat of the key facing upwards), and screw in the indicator rod to hold them in that position.
6. Fit the thrust ring and washer, making sure that the flatted ends of the key engage properly in the slots of the thrust ring.
7. Fit the previously prepared gear-ring sub-assembly.
8. Fit the previously prepared right-hand ball-ring sub-assembly.
9. Fit the previously prepared driver sub-assembly.
10. Drop the clutch spring over the axle.
11. Fit the cap and screw up the right-hand cone *finger-tight*. Then slacken it back half a turn and lock it in that position with the special washer and locknut. On no account must the cone be unscrewed more than half a turn, as that would throw the gear mechanism out of adjustment.
12. Invert the assembly in the vice and fit the planet-cage pawls as described in the general instructions to 'The Re-assembling of Sturmey-Archer Hubs.'
13. Remove the assembled mechanism from the vice and, while holding it with the planet cage uppermost, pour about two teaspoonfuls of a good quality thin oil into the cage.
14. Hold the cycle wheel in the left hand, with the open (right-hand) end of the hub shell facing downwards, and insert the assembled mechanism from below, screwing up the right-hand ball ring finger-tight only.
15. Make sure that the position marks made on the ball ring and the hub flange before dismantling will register properly, and then screw up tightly.
16. Fit the left-hand cone and spacing washer.
17. Replace the brake anchor plate complete with shoes. (If the shoes have been removed, make sure when replacing them that the longer of the two short arms on the cam spindle is pointing towards the drum surface and the shorter one towards the hub axle; otherwise only one shoe will be brought into action when the brake is operated.) If the brake shoe assembly has been dismantled, see general instructions.
18. Fit the outer washers, the notched cone-adjusting washer, and the left-hand locknut in the arrangement noted when dismantling the hub. Adjust the hub bearing as described in 'The Fitting Adjustment of Sturmey-Archer Hubs.'
19. If the sprocket has been removed from the driver, fit the outer dust cap over the driver before replacing the sprocket, and see that the dust cap is properly centred on the flange of the driver. Replace the sprocket and spacing washers in the arrangement noted when dismantling, and add the circlip.
20. Replace the wheel in the cycle frame and adjust the gear as described in 'The Fitting and Adjustment of Sturmey-Archer Hubs.'

STURMEY ARCHER